Vedi Side Table

Fixed-height visitor table for the patient room family zone.



SPECIFICATIONS

Overall height	25.80 in.
Tabletop (W × D)	14.00 × 19.50 in.
Base footprint (W × D)	14.50 × 19.00 in.
Working load capacity	25 lbs.
Product weight	29 lbs.

CONSTRUCTION

- Rounded-corner KYDEX® tabletop over MDF
- Aluminum support column
- ⅜ in. steel U-shaped base plate
- Stainless steel glides

DIMENSION VIEWS (Inches)

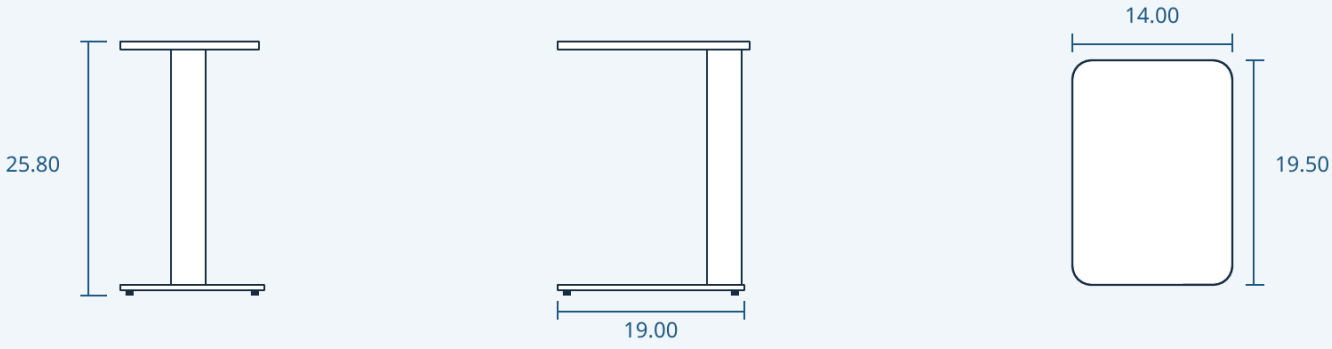

ORDER NUMBER

R10-19-S100033-Kxxx The final three digits identify the finish color.